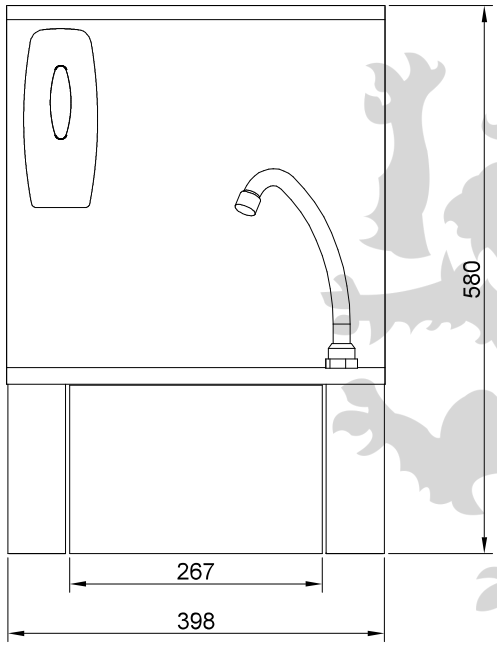

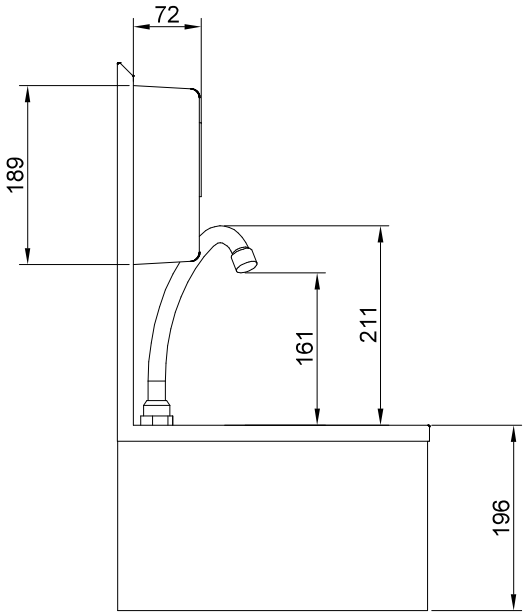

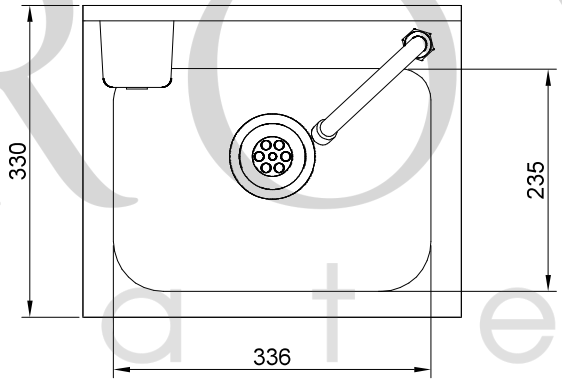

ROYAL catering

ROYAL catering	Knee Contact Hand Wash Basin Item number: 1159	11.10.2016	Scale: 1:8 Unit: mm	Page 1/1